FILM
PROCESSING

Edited by
Toshitaka Kanai and Gregory A. Campbell

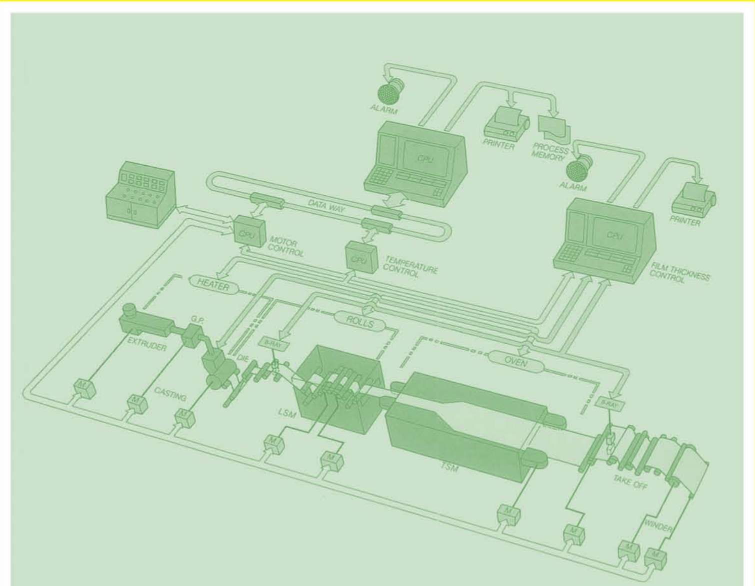

HANSER

Kanai, Campbell

Film Processing

Polymer Processing Society

W. Baker / C. Scott / G.-H. Hu
Reactive Polymer Blending

R. Davé / A. Loos
Processing of Composites

M. R. Kamal / A. I. Isayev / S.-J. Liu
Injection Molding

I. Manas-Zloczower
Mixing and Compounding of Polymers

I. M. Ward / P. D. Coates / M. Dumoulin
Solid Phase Processing of Polymers

J. L. White / H. Potente
Screw Extrusion

Toshitaka Kanai
Gregory A. Campbell

Film Processing

With Contributions by:
M. Cakmak, G.A. Campell, Ch. Finch., H. Ishihara, T. Kanai, T. Miki, S. Nonomura,
J. Perdikoulias, W. Predöhl, M. Takashige, N. Takeuchi, K. Tobita, K. Tsunashima,
J. Vlachopoulos, J.L. White, T. Yamada

HANSER
Hanser Publishers, Munich
Hanser Publications, Cincinnati

The Editors:
Toshitaka Kanai, Laboratories Idemitsu Kosan Co., Ltd., 1-1 Anesaki-Kaigan, Ichihara, Chiba, Japan 299-0193
Gregory A Campbell, 1145 Mason Bay Road, Jonesport ME 04649

Distributed in the USA and in Canada by
Hanser Publications
6915 Valley Avenue, Cincinnati, Ohio 45244-3029, USA
Fax: (513) 527-8801
Phone: (513) 527-8977
www.hanserpublications.com

Distributed in all other countries by
Carl Hanser Verlag
Postfach 86 04 20, 81631 München, Germany
Fax: +49 (89) 98 48 09
www.hanser.de

Library of Congress Cataloging-in-Publication Data

Kanai, T. (Toshitaka)
Film processing / Toshitaka Kanai, Gregory A. Campbell ; with
contributions by M. Cakmak ... [et al.].
p. cm.
Includes bibliographical references and index.
ISBN-13: 978-1-56990-506-7 (hardcover)
ISBN-10: 1-56990-506-1 (hardcover)
ISBN-13: 978-3-446-43006-8 (hardcover)
1. Plastic films. I. Campbell, G. A. (Gregory A.) II. Title.
TP1183.F5K36 2011
668.4’95--dc23
2011028002

Bibliografische Information Der Deutschen Bibliothek
Die Deutsche Bibliothek verzeichnet diese Publikation in der Deutschen Nationalbibliografie;
detaillierte bibliografische Daten sind im Internet über <http://dnb.d-nb.de> abrufbar.

ISBN 978-3-446-43006-8

Reprint of the 1st Edition © 1999
Production Management: Steffen Jörg
Coverdesign: Stephan Rönigk
Typeset: Techset Composition Ltd., Salisbury, UK
Printed and bound by Books on Demand, Norderstedt
Printed in Germany

PROGRESS IN POLYMER PROCESSING SERIES

Dr. Leszek A. **Utracki**
National Research Council of Canada
CANADA

Dr. George **Vassilatos**
E. I. Du Pont Co.
U.S.A.

Prof. John **Vlachopoulos**
McMaster University
CANADA

Prof. I. M. **Ward**
The University of Leeds
UNITED KINGDOM

Prof. James L. **White**
University of Akron
U.S.A.

Prof. Xi **Xu**
Chengdu University of Science and Technology
CHINA

Foreword

Since the Second World War, the industry based on polymeric materials has developed rapidly and spread widely. The polymerization of new polymeric species advanced rapidly during the sixties and the seventies, providing a wide range of properties. A plethora of specialty polymers have followed as well, many with particularly unique characteristics. This evolution has been invigorated by the implementation of metallocene catalyst technology. The end-use of these materials has depended on the development of new techniques and methods for forming, depositing, or locating these materials in advantageous ways, which are usually quite different from those used by the metal or glass fabricating industries. The importance of this activity, "Polymer Processing", is frequently underestimated when reflecting on the growth and success of the industry.

Polymer processes such as extrusion, injection molding, thermoforming, and casting provide parts and products with specific shapes and sizes. Furthermore, they must control, beneficially, many of the unusual and complex properties of these unique materials. Because of their high molecular weights and, in many cases, tendency to crystallize, polymer processes are called upon to control the nature and extent of orientation and crystallization, which in turn, have a substantial influence on the final performance of the products made. In some cases, these processes involve synthesizing polymers within a classical polymer processing operation, such as reactive extrusion. Pultrusion and reaction injection molding both synthesize the polymer and form a finished product or part all in one step, evidence of the maturing of the industry. For these reasons, successful polymer process researchers and engineers must have a broad knowledge of fundamental principles and engineering solutions.

Some polymer processes have flourished in large industrial units, synthetic fiber spinning for example. However the bulk of the processes are rooted in small- and medium sized entrepreneurial enterprises in both developed and new developing countries. Their energy and ingenuity have sustained growth to this point but clearly the future will belong to those who progressively adapt new scientific knowledge and engineering principles, which can be applied to the industry. Mathematical modeling, online process control and product monitoring, and characterization based on the latest scientific techniques will be important tools in keeping these organizations competitive in the future.

The Polymer Processing Society was started in Akron, Ohio in 1985 with the aim of providing a focus, on an international scale, for the development, discussion, and dissemination of new and improved polymer processing technology. The Society facilitates this by sponsoring several conferences annually and by publishing the journal International Polymer Processing, and the volume series Progress in Polymer Processing. This series of texts is dedicated to the goal of bringing together the expertise of accomplished academic and industrial professionals. The volumes have a multi-authored format, which provides a broad picture of the volume topic viewed from the perspective of contributors from around the world. To accomplish these goals, we need the thoughtful insight and effort of our authors and volume editors, the critical overview of our Editorial Board, and the efficient production of our Publisher.

This volume deals with the manufacturing processes for preparing polymer products, which are very thin. These processes have developed into what is arguably the single largest outlet for synthetic polymers. They are dependent on the best achievements in polymer design to provide the appropriate shear and extensional viscosity for successful processing. These design achievements have also produced the mechanical and optical properties so important in applications. But most important in this volume are the developments in process hardware and operating techniques that permit increasingly high production rates, optimum property development, unusual degrees of molecular orientation and the co-extrusion of multi-layer, multi-component film and sheet. This volume includes numerous contributions, industrial and academic, from Japan as well as Europe and North America and, as such, forms a very useful contribution to the film and sheet industries.

Kingston, Ontario, Canada

Warren E. Baker
Series Editor

Contents

Contributors

Cakmak, Prof. M., Polymer Engineering Center, College of Polymer Eng. & Sci., University of Akron, Akron, OH 44325, USA

Campbell, Prof. C. A., Department of Chemical Engineering, Clarkson University, Potsdam, New York 13676, USA

Finch, Ph.D. C. R., 1280 E. Chippewa River Rd., Midland, Michigan 48640, USA

Ishihara, Dr. H., Film Research Laboratory, Toyobo Co., Ltd, 2-1-1 Katata, Otsu, Shiga 520-02, Japan

Kanai, Dr. T., Polymer Research Laboratory, Idemitsu Petrochemical Co. Ltd., 1-1 Anesaki-kaigan, Ichihara, Chiba, 299-01 Japan

Miki, Mr. T., Nagoya Research Laboratory, Mitsubishi Heavy Industries Ltd., Iwatsuka-cho, Nakamura-ku, Nagoya 453 Japan

Nonomura, Mr. S., Katata Research Institute, Toyobo Co., Ltd., 2-1-1 Katata, Ohtsu, Shiga 520-02 Japan

Perdikoulias, Dr. J., Compuplast Canada Inc., Mississauga, Ontario L5M 5A7, Canada

Predöhl, Prof. Ing. W., Krupp Corpoplast, Maschinenbau GmbH, 22145 Hamburg, Germany

Takashige, Mr. M., Packaging Products R&D Center, Idemitsu Petrochemical Co., Ltd., 841-3 Kou, Shirahama-cho, Himeji, Hyogo 672 Japan

Takeuchi, Mr. N., Nagoya Research Laboratory, Mitsubishi Heavy Industries Ltd., Iwatsuka-cho, Nakamura-ku, Nagoya 453 Japan

Tobita, Mr. K., Plastics & Textile Machinery Dept., Nagoya Machinery Works, Mitsubishi Heavy Industries Ltd., Iwatsuka-cho, Nakamura-ku, Nagoya 453 Japan

Tsunashima, Dr. K., Film Research Laboratory, Toray Industries Inc., 1-1-1 Sonayama, Otsushi City, Shiaga 520, Japan

Vlachopoulos, Prof. J., Department of Chemical Engineering, McMaster University, Hamilton, Ontario, L8S 4L7, Canada

White, Prof. J. L., Polymer Engineering Center, College of Polymer Eng. & Sci., University of Akron, Akron, OH 44325, USA

Yamada, Prof. T., Dept. of Chemistry and Chemical Engineering, Faculty of Technology, Kanazawa University, 40-20 Kadatsuno 2-chome, Kanazawa, Ishihawa 920, Japan

Preface

As this volume is being developed, the polymeric film industry is in a major transition from relying only on commodity resins as their film base, to the use of more well-defined materials and processes. In terms of resins, metallocene catalyzed polymers have been developed and polymer structure can now be tailored to improve or help optimize film process design. Engineering plastics such as polyethylene terephathalate (PET), polycarbonate, and polyamides have become popular resins to provide high temperature resistance in films when desired. The line speeds of film production have reached 400 m/min for oriented Polypropylene and oriented PET. In addition, the technology to tenter crystal polystyrene has also been commercially developed. These achievements in high speed production and alternative starting materials follow the development of new machines, improvements in polymer material characteristics and optimization of processing techniques. A further demand for more complex, multilayered films for various uses in packaging has led to the development of more complicated die designs and control so that the required film thickness and composition can be maintained.

This book was conceived to address what appeared to be a void in the polymer processing literature. While we were pursuing our own efforts to understand the fundamentals and practical needs of the film practitioners, we found no condensed collection of the science and technology for production and evaluation of polymeric films. We have endeavored to provide the polymeric film processing community with a volume which will be a starting point regarding both the state of theory and technology of film production at the time the volume was written by the contributing authors.

Film extrusion is one of the most popular commercial polymer processing techniques and the resulting film products are widely used in our daily life. Recently, because of competition from other materials, the economics of film production have moved to higher productivity of film production methods; high speed lines and high quality reproducible film have been required in order to reduce cost and to obtain additional value. A few examples of this economically driven technology are in the production of very thin capacitor film, very thin and dimensionally stable video recording film and multilayered film for the protection of fresh food. To achieve these requirements, we need to have a wide base of technology, not only the traditional empirical knowledge that dominates the film industry, but also a more basic understanding of the chemistry, physics and engineering that influence the film's properties. Topics introduced to the reader in this book are the structure of the polymer, the rheology of a polymer, theoretical analysis of film processes, structure and morphology of the film product, and finally the physical properties of film.

Unfortunately, it is not possible to present, in one book, all of the science and technology that relates to film extrusion. This book addresses the following topics: extrusion die design and analysis, theory and technology of the blown film process, cast film process, multilayered film technology, and biaxially oriented film analysis of both the tentering process and double bubble tubular film process. We first present a short survey of the film extrusion process and industry. Then we provide the reader with a very brief introduction to the rheology involved with film process analysis. There follows a short introduction to flat and annular die design. A substantial fraction of the book describes the biaxially orientation film processes in more detail than is usually found in other collected works on this subject. Topics that are discussed in some detail are the theoretical analysis of film extrusion outside of the die, the structure of film, the physical properties of film and the relationship among these topics. Film production covers a very wide range of technology.

We appreciate the substantial efforts of all of the authors who shared new and recently developed technology in their specialized technical fields in their chapter contributions. The International Polymer Processing Society continues to publish a series of books on polymer processing. We wish to thank Professor Warren Baker, the series editor, for all of his efforts during the development of this volume. We hope our contribution to this series will help the reader develop an introductory understanding of film extrusion. A more in depth understanding can be developed by using the references in each chapter to lead to the original literature which of course has more details than can be condensed into a single book.

Ichihara, Japan *Toshitaka Kanai*
Clarkson, USA *Gregory A. Campbell*

1 Film Processing: Overview and Introductory Rheology

Gregory A. Campbell and Toshitaka Kanai

1.1 Introduction

Several processes dominate the polymer industry at this time, including injection molding, blow molding, sheet extrusion, vacuum forming, and film extrusion. Worldwide, the polymer industry grew to a reported 101 million metric ton level in 1993 with a projected growth of 4% annually to a 123 million metric ton level in 1998 [1]. Although North America, Western Europe, and Asia/Oceania produce 90% of the world's polymers, North America, Japan, and Western Europe comprise 75% of this demand. Owing to the rapidly developing economies in the area, the demand in Asia is expected to increase rapidly over the next decade. A large volume of this plastic production is related to polyethylene (PE), polypropylene (PP), and poly(vinyl) chloride (PVC) which dominate the film markets. Other polymers that are becoming important, particularly in the tentered film market, are polyesters, polystyrene, and engineering polymers such as nylon and polycarbonate in which case high strength and impermeability are key parameters.

The purpose of this book is to address some of the technology developed in the recent past that addresses the process of film extrusion, recognizing that all aspects of film extrusion cannot be addressed in a single volume. Thus, we have endeavored to cover several important subtopics in film extrusion in some depth and to present an introduction to several other topics so that the reader will have an introductory foundation to facilitate further investigation into these areas.

We have tried to pay substantial attention to the areas of blown film, cast film, the multistep processes of tentering, and double bubble film formation. In addition, we have included several aspects of the complex interaction between process kinematics and material property–morphology relationships. Finally, we have included introductory chapters on multilayer film processing and process control.

1.2 Cast Film

The cast film process, one of the two most widely used in the film industry, is a high-speed process for making film that is highly oriented in the machine direction (Fig. 1.1). In this process film is extruded from a flat die and rapidly stretched in the machine direction by the motion of a "chill" roll, which also provides the high cooling rates necessary for freezing in the molecular orientation produced during stretching. If the edge motion of the film is discounted then rheologically this process is almost planar extension. These films, therefore, have very different tear and tensile properties in the machine and transverse directions, because the molecular structure is highly oriented in the machine direction. Films are often produced with a wide variety of thicknesses: 7 μm for typewriter ribbon, 14 to 25 μm for stretch wrap, and 18 to 50 μm for packaging [2]. The film speeds often vary from 70 to 200 m/min. Typical gauge variation in cast film is reported to be ±3 to 5%, with some manufacturers claiming a rate as low as 1.5%. The cost of a typical coextrusion cast film line, in 1995, is 1.7 to 2.3 million dollars plus installation.

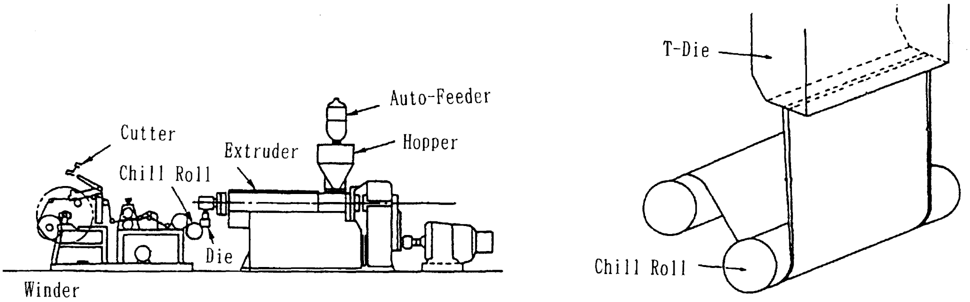

Figure 1.1 Schematic view of T-die cast film extrusion

1.3 Blown Film

Blown film, the other widely used process in film making, produces film by extruding material from an annular die and then extensionally stretching the molten polymer over a mandrel of air trapped inside the blown film bubble while the polymer is cooled by radiation and forced convective cooling from external air rings as well as internal bubble cooling distributers in many cases (see Fig. 1.2). The polymer molecular orientation in the blown film process is the result of a complex interaction between polymer rheology and the process parameters. The film essentially can be oriented biaxially by using small die gaps and low drawdown ratios. In the case of very large die gaps and high nip speeds the film can undergo almost pure planar orientation near the frost line. In the first case it would be expected that the machine and cross-machine properties would be the same, a balanced film, and in the second case the properties would not be expected to be the same and might be described as splitty in the machine direction. Polyolefins such as the polyethylene family—low-density polyethylene (LDPE), linear low-density polyethylene (LLDPE), and high-density polyethylene (HDPE)—are the most widely used polymers in the blown film industry because they have rapid crystallization rates that are consistent with the process cooling time of 1.5 to 5 s on commercial lines. Other polymers including ethylene copolymers, nylon, thermoplastic polyurethane (TPU), and polycarbonate are also produced by this process at much lower volumes and with appropriate process modifications [3]. In North America about 80 new film lines are installed each year, resulting in 140 million kg of production. A single layer line costs between 350 and 700 thousand dollars in 1995 and multilayer lines cost as much as 3 million dollars.

1.4 Tentering

The tentering process, illustrated in Fig. 1.3, is gaining market share as the need to produce films with predictable orientation to meet property specifications increases. In the tentering process polymer is extruded from a sheet die and cooled and oriented in the machine direction

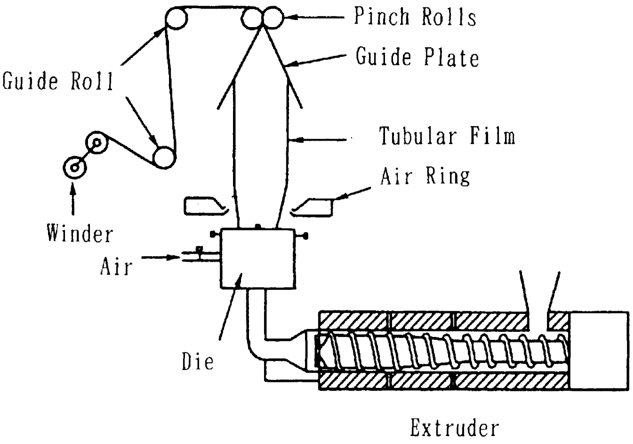

Figure 1.2 Schematic view of tubular film extrusion

by the relative motion of two cooled rolls. The film is then grasped by tenter hooks and carried into an oven where it is oriented normal to the machine direction. The orientation in the machine and cross-direction can be independently controlled and, unlike the situation in the blown film process, the orientation is not dominated by the polymer rheology. Another advantage is that the process has a relatively long residence time in the tenter oven so that slow crystallization rate polymers such as polypropylene and polyethylene terephthalate (PET) can be effectively produced. Also, recently "crystal" polystyrene has been extensively tentered for transparent packaging of cookies and salads. Because orientation can be independently controlled properties can be controlled. The cost of a tenter line can run several million dollars even for a small line.

1.5 Double Bubble Process

Another process that has been used to produce film from slowly crystallizing polymers, such as polyvinylidene chloride (PVDC), PET, or PP, is the double bubble process, illustrated in Fig. 1.4. In this process a blown film bubble is produced in the conventional manner and the bubble is quenched normally using either cold air or water. The bubble is then transported between two sets of nips and the polymer is reheated to a temperature where the crystallization kinetics can be coordinated with the kinematics of stretching which will yield optimum properties of the film. Using this process the transverse and machine direction properties can be optimized.

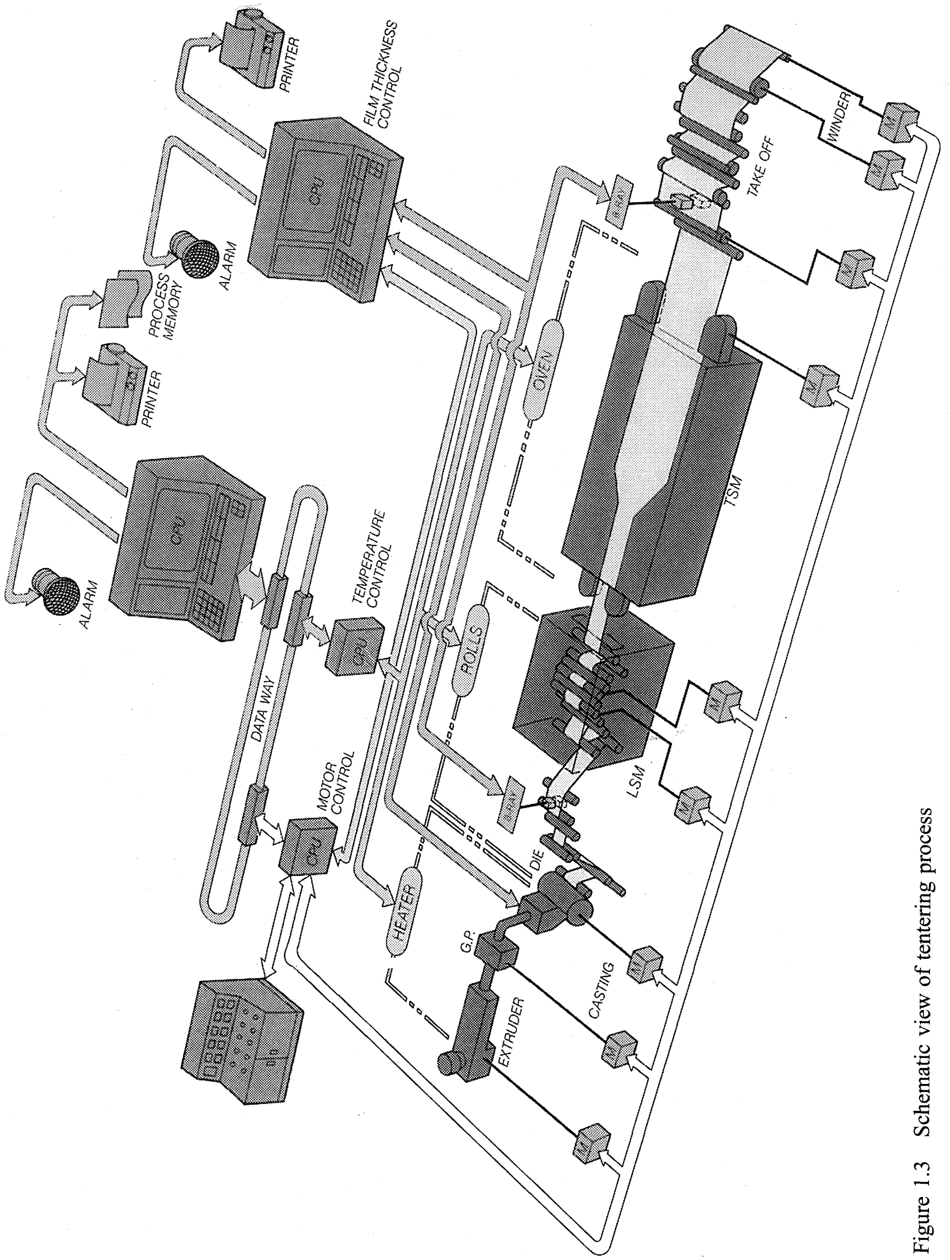

Figure 1.3 Schematic view of tentering process

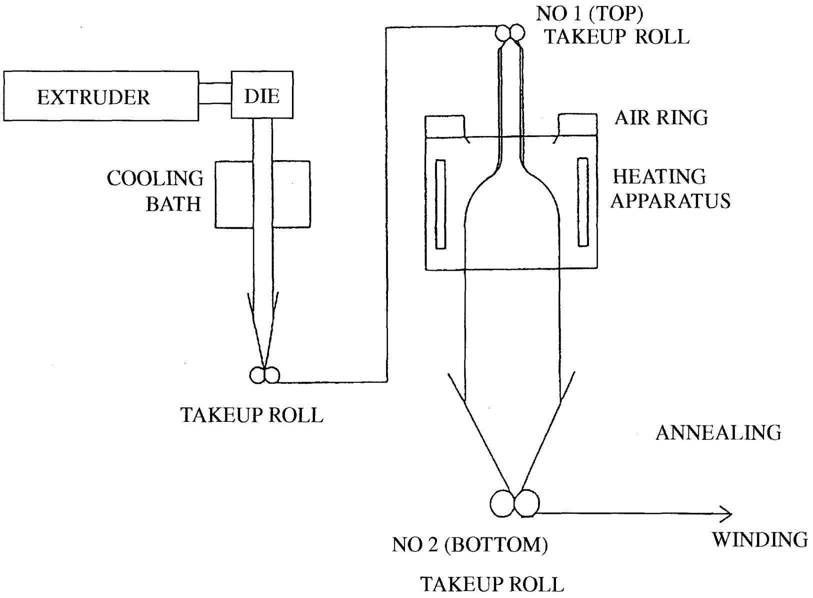

Figure 1.4 Schematic view of double bubble tubular film process

1.6 Volume Contents

The remainder of this chapter consists of a very brief introduction to shear and elongational rheology. We believe that because film processing is dominated by what happens in the extruder and die followed by shear free flow as the films are stretched, the reader might wish to review both of these rheological concepts before examining the details of any one of the processes addressed in this volume. Chapter 2 concentrates on the analysis of flat and spiral mandrel dies. In addition a section is included on film thickness control systems. Chapter 3 covers many aspects of the blown film process. The subjects addressed include deformation and heat transfer, kinematics and dynamics and their influence on film properties, and an experimental evaluation technique to quantify the instability in blown film. The last section in this chapter deals with optical property development and evaluation in production. Chapter 4 relates to cast film processing and includes a theoretical analysis of the cast film process that relates process kinematics, rheology, and dynamics. The second part of Chapter 4 deals with a very important aspect of the cast film process: the analysis of process stability. Chapter 5 covers an introduction to the process and equipment specification of multilayer film. Finally, Chapter 6 describes in some depth the tentering and the double bubble processes, which are the main techniques for controlling orientation of slowly crystallizing and amorphous polymers.

1.7 Rheological Considerations

Film processing is rheologically complex. In the extruder and die the processing is dominated by shear flow deformation. After the polymer exits the die, it undergoes essentially shear free flows as the material is stretched and oriented. As a result both steady shear and extensional rheological analyses must be utilized when examining these complex processes. In addition, all of these processes are carried out in a manner such that the polymer is cooled through a thermal transition, either a melting point or glass transition temperature. Thus, to understand fully material property development we will also need to understand the solidlike behavior of these materials at temperatures in the vicinity of the transition temperatures. It should be understood that there are very little data and very few theories that accurately reflect polymer deformation behavior near these transition regions. The following sections are intended only as a brief introduction to the complex nature of shear and extensional rheology exhibited by most polymers.

1.7.1 Shear Rheology

The polymeric fluid in extruders, sheet dies, and spiral mandrel dies undergoes complex motion involving several velocity vectors. The gradients of these velocities are referred to as the shear rates in the respective coordinate systems. The deformation rate, $\dot{\gamma}$, is defined in terms of the second scalar invariant of the shear rate tensor:

$$\dot{\gamma} = \sqrt{\frac{1}{2} I_2} \tag{1.1}$$

where:

$$I_2 = \sum_i \sum_j \dot{\gamma}_{ij} \dot{\gamma}_{ji} \tag{1.2}$$

For plane Couette flow the second invariant is:

$$I_2 = 2\dot{\gamma}_{yx}^2 \tag{1.3}$$

and it thus follows from Eq. (1.2) that the deformation rate is equivalent to the simple shear rate:

$$\dot{\gamma}_{xy} = \frac{dv_x}{dy} \tag{1.4}$$

It then follows that the Newtonian viscosity, η, is defined as:

$$\tau_{yx} = \eta \dot{\gamma}_{yx} \tag{1.5}$$

where τ_{yx} is the shear stress. In general the viscosity of most polymers is a complex function of temperature and shear rate and not a constant as indicated in Eq. (1.5). We know that at very low shear rates the viscosity approaches the constant Newtonian value. A simple function for the viscosity at high shear rates is the power law model of Ostwald–deWaele [4] which is the tangent line to the log viscosity–log shear rate function at high shear rates. We see that neither the Newtonian approximation nor the power law approximation works well. In many cases the viscosity is approximated by what is referred to as the truncated power-law model:

$$\begin{aligned} \eta &= \eta_0 & \dot{\gamma} &< \dot{\gamma}_0 \\ \eta &= \eta_0 \left[\frac{\dot{\gamma}}{\dot{\gamma}_0}\right]^{n-1} & \dot{\gamma} &> \dot{\gamma}_0 \end{aligned} \tag{1.6}$$

In this case the viscosity is represented by the Newtonian approximation up to the shear rate, where this function intersects the power law model, and then the viscosity is represented by the power law at higher shear rates. This solves the problem of the unrealistically high viscosities predicted by the power law at high shear rates. We also observe that the Newtonian viscosity is a stronger function of temperature than the viscosity in the power law region. By breaking the function into two parts reasonable first approximations of the effect of temperature can be used for the complete shear rate range. Two other models extensively used in shear flow dominated applications are the three-parameter model of Ellis [5]:

$$\frac{\eta_0}{\eta} - 1 = \left(\frac{\pi\tau}{k}\right)^{a-1} \tag{1.7}$$

or the four-parameter model of Carreau [6]:

$$\frac{\eta - \eta_\infty}{\eta_0 - \eta_\infty} = [1 + (\lambda\dot{\gamma})^2]^{-(1/2)} \tag{1.8}$$

All of these models must have the parameters as functions of temperature. Recently, Campbell and Adams [7] have developed a model to account for temperature and shear thinning that automatically deals with the complex temperature and shear rate interrelationships and these functions were related to the polymer molecular weight and distribution. Because in film processing one goes from shear-dominated flow to free surface flows as the polymer leaves the die, more complex viscoelastic models would be appropriate if the data were available to relate the model parameters to temperature and shear rate. Some of these models are discussed in the following section, where we introduce elongational flow.

1.7.2 Elongational Rheology

Many polymer converting processes involve melt flows in which the polymer is subjected to flow-induced stresses. These flows have been identified to be phenomenologically different from the better understood shear flows in the sense that the structure-dependent rheological properties change significantly over the course of the flow history owing to constant evolution of molecular conformation. Hence, as observed, the polymer's responses to tensile stresses have often been contrary to those predicted by theories developed primarily for viscometric flows. As far as the elongational flows are concerned, in the last decade, rheologists have made substantial progress in both theoretical and experimental understanding of the accompanying macroscopic phenomena and have tried to relate these to molecular models of polymer melts, some of them involving as many as eight relaxation time parameters. From the perspective of practical applications, for process modeling of elongational flow dominated processes such as film blowing, fiber spinning, and blow molding, use of a simple rheological model with fewer experimentally determinable parameters helps to eliminate the intractability of the combined governing system of equations.

1.7.3 Literature Review

Despite the difficulties involved, extensive experimental work on the elongational flow of polymer melts has been carried out in the last two decades. Although simple uniaxial elongational flow dominates the literature, biaxial and planar flows have also been reported. Studies in the uniaxial flow experiments include a wide range of polymers such as LDPE [8 to 12], LLDPE, polystyrene [8, 10, 13, 14], HDPE [10], polyisobutylene [15], and PP [10, 16]. Ide and White [10] provide a detailed summary of these studies up to 1978. Also, a description of the measurement of elongational viscosity is presented in Chapter 3.1.2 in this volume.

With regard to the theoretical interpretation of these studies, the earliest linear superposition principle derived by Boltzmann has been the basis on which later theories were developed. According to the Boltzmann's principle:

$$\tau_{ij}(t) = \int_{-\infty}^{t} G(t - t')\, d\gamma_{ij}(t') \tag{1.9}$$

where τ_{ij} is the extra stress tensor component, $G(t)$ is the linear relaxation modulus of the melt, and the multiplier is the small strain tensor component. For small deformation rates or at the beginning of the higher deformation rate (the so-called linear range), the Boltzmann theory successfully predicts polymer behavior. But it does not work beyond the linear range, as has been demonstrated experimentally. A number of theories have since been developed taking into account finite measures of strains and a strain-dependent memory function. Use of the finger or Cauchy's strain tensor did provide a more realistic equation of state called "Lodge's rubberlike liquid equation," given by:

$$\tau = \int_{-\infty}^{t} \mu(t - t')B^{-1}(t, t')\, dt' \tag{1.10}$$

where $\mu(t - t')$ is the memory function and $B^{-1}(t, t')$ is the finger tensor. The behavior predicted by Eq. (1.10) for the startup of steady simple extension has been reported in detail by Lodge [17] and by Dealy and Wissbrun [18]. The stress growth function increases without limit for higher values of strain rates. The steady-state elongational viscosity is infinite for a particular value of strain rate which is contradictory with the experimental observations, as demonstrated in Fig. 1.5. The use of terms such as "strain softening" and "strain hardening" is a result of the use of a different base defining the neutral behavior. As pointed out by Dealy [19], if the predictions of the Lodge equation are considered as the basis, all the polymers will exhibit strain softening. The deviation of actual stresses from those predicted by Eq. (1.10), the ratio of the two termed "the damping function," has been a convenient way of reporting the data in the literature [20].

Relaxation of the assumptions made in the development of the earlier models resulted in a series of viscoelastic [21] models suitable for one or another type of melt flows. Application of these models to simple uniaxial elongational flow include the convected contravariant Maxwell model with single relaxation time by Agrawal et al. [8], Lodge's model with the